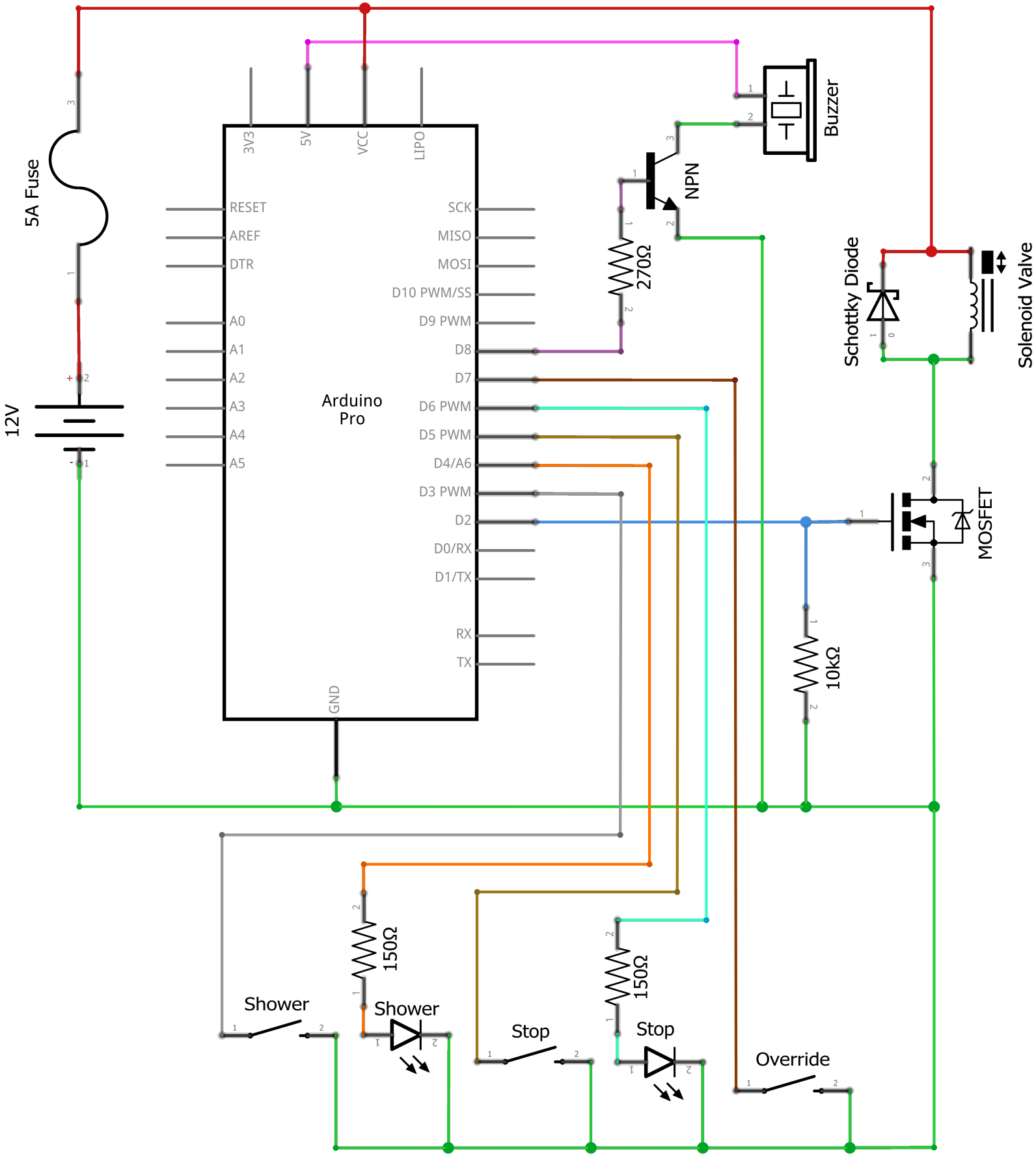
5A Fuse
12V
3V3
5V
VCC
LIPO
RESET
AREF
DTR
A0
A1
A2
A3
A4
A5
Arduino
Pro
SCK
MISO
MOSI
D10 PWM/SS
D9 PWM
D8
D7
D6 PWM
D5 PWM
D4/A6
D3 PWM
D2
D0/RX
D1/TX
RX
TX
GND
Buzzer
NPN
270Ω
Schottky Diode
Solenoid Valve
MOSFET
10kΩ
150Ω
150Ω
Shower
Shower
Stop
Stop
Override
fritzing